# STAR 6

## GO EVERYWHERE

- High precision driving & smoothness
- Comfort & agility
- Indoor / outdoor rated (versatile)
- Easy access to the platform
- Smart transportability & lifting

## WITH THE BEST VALUE FOR MONEY

- Haulotte Activ'Energy Management takes care of your batteries
- Easy access to components
- Smart mast system
- Minimal maintenance & downtime
- Direct electric drive with brushless AC motors
- Haulotte Activ'Screen (onboard diagnostic)

# STAR 6

## VERTICAL MASTS

## TECHNICAL DATA

| | STAR 6 |
|---|---|
| Working height | 5.8 m |
| Platform height | 3.8 m |
| Horizontal outreach | 0.4 m extension (option) |
| Lift capacity - inside | 230 kg (2 pers.) |
| Lift capacity - outside | 230 kg (1 pers.) |
| A Length | 1.4 m |
| B Width | 0.79 m |
| C Height - stowed | 1.75 m |
| D Wheelbase | 1.06 m |
| E Ground clearance | 6 cm |
| Platform size | 0.77 x 1.38 m |
| Drive speed proportional | 0.8 - 4.5 km/h |
| Turning radius - outside | 1.7 m |
| Tilt alarm | 1.5 ° / 3 ° |
| Gradeability | 25 % |
| Max driveable platf. height | 3.8 m |
| Tyres - non marking | 318 x 108 |
| Power source | 12 V - 105 Ah (C5) |
| Weight | 835 kg |

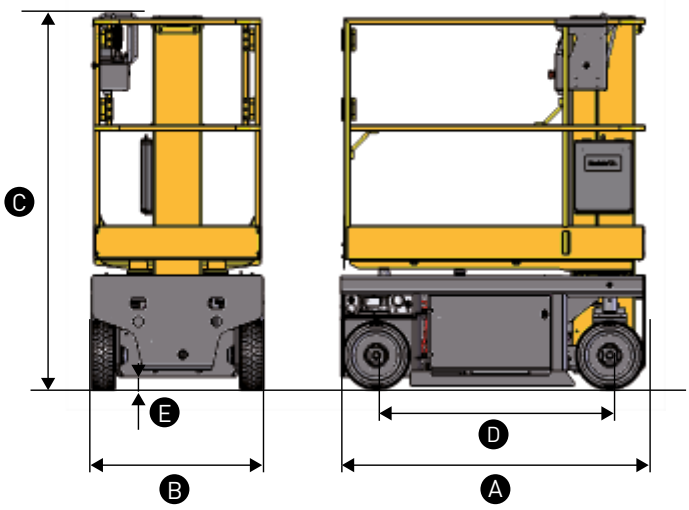


## STANDARD EQUIPMENTS

> Haulotte Activ'Energy Management: Smart CAN charger
> 24 V electric drive brushless AC motors
> 2 x 12 V - 105 Ah batteries
> Battery charge indicator
> Haulotte Activ'Screen
> Fork lifting pockets
> Hoisting and lifting points
> Swing door entry gate
> Mobile potholes
> 2 front steering wheels
> 2 rear driving wheels
> Non marking tyres
> Brake release
> Hourmeter
> Horn
> Travel alarm
> Emergency stop
> Emergency hand pump
> 2 control stations at cage and ground level
> Mobile upper control box
> 2 towing hooks
> Protection baseboard

## OPTIONS AND ACCESSORIES

> Haulotte Activ'Energy Management: automatic or manual battery waterfilling systems
> Upper control box protection cover
> Tool tray
> Platform extension deck + 0.4 m / + 1 ft 4 in (height stowed: 1.8 m / 5 ft 11 in) (standard in AUS / NZ)
> Power line in platform
> Ground-fault circuit interrupter 30 mA
> Telematics ready
> Biodegradable oil
> Hydraulic oil for cold countries
> Flashing light (standard in AUS / NZ)
> Fluorescent tube caddy

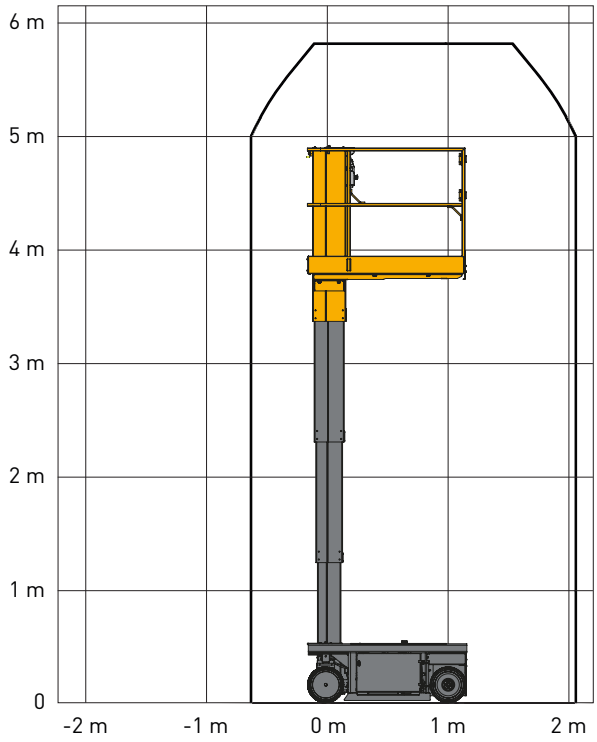


4000864760 · Non contractual document · We reserve the right to modify the technical characteristics of this document without notice · 01/2021

Haulotte Australia Pty Ltd · 46 Greens Road - VIC 3175 VIC Dandenong, Australia ·
Phone: +61 300 207 683 · Fax: +61 3 9792 1011 · salesau@haulotte.com · **www.haulotte.com.au**

Haulotte
LET'S DARE TOGETHER